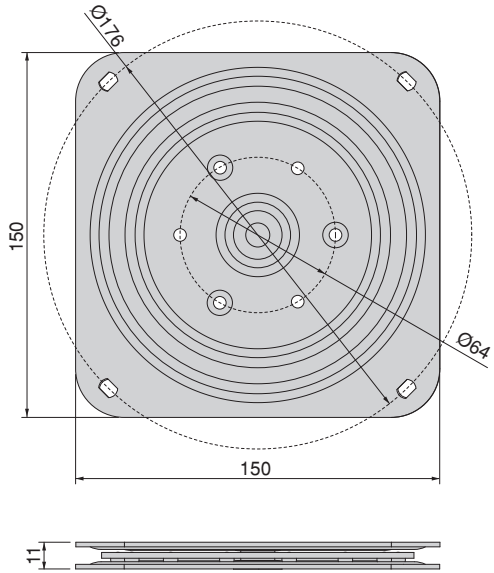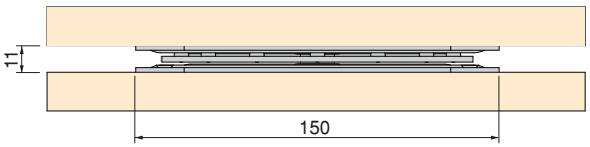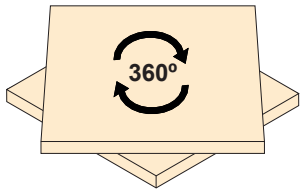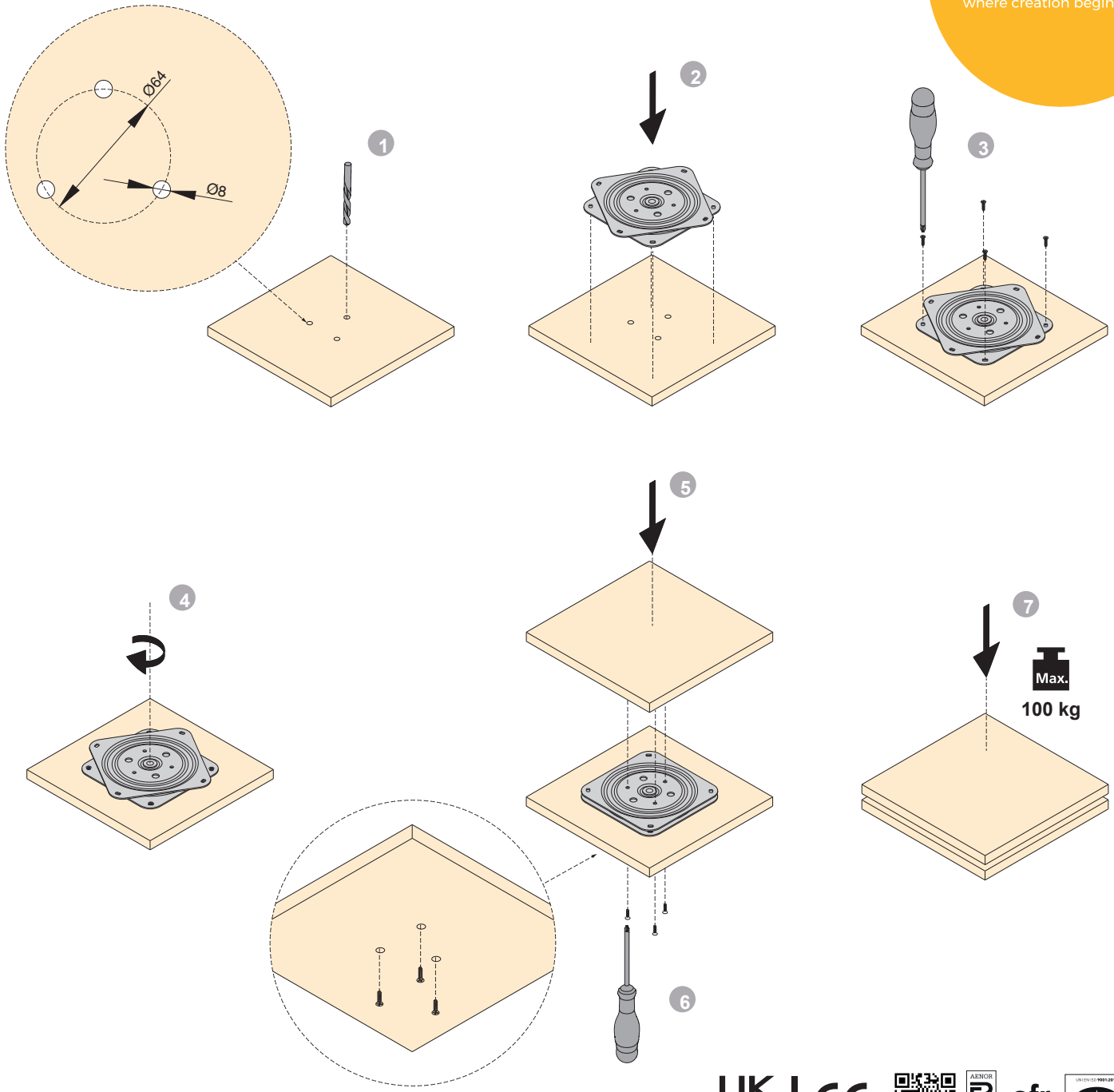emuca
where creation begins