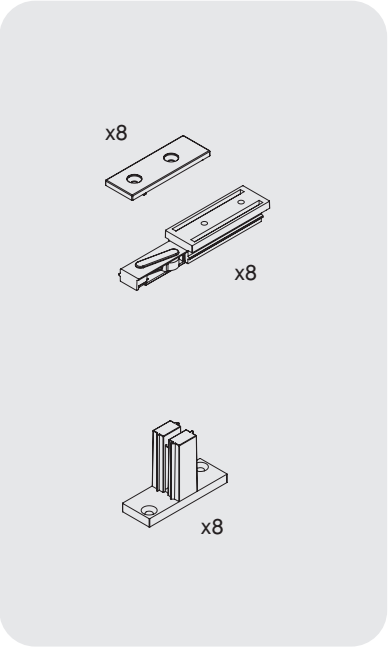
x8
x8
x8

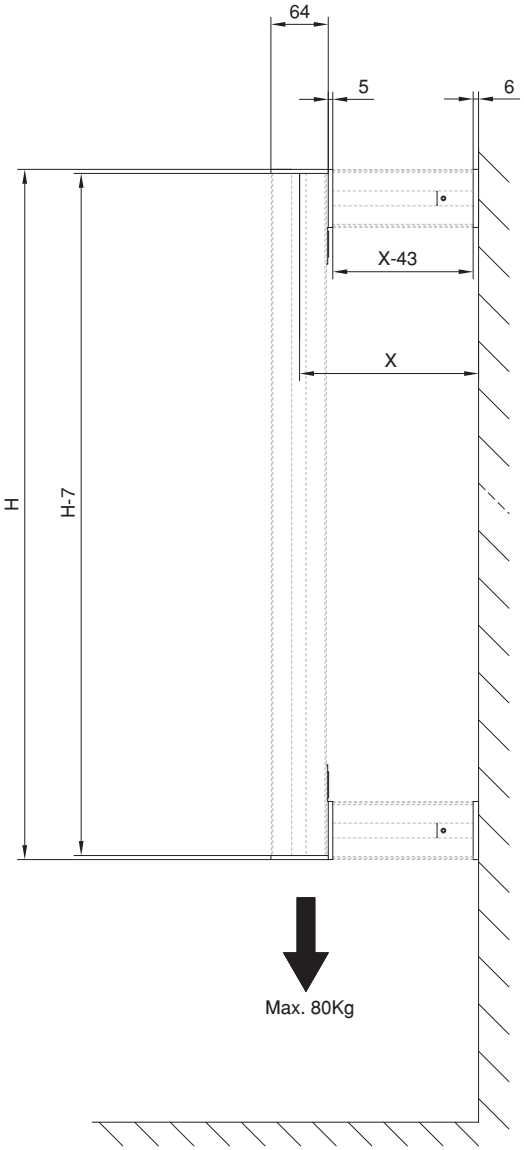
64
5
6
X-43
X
H
H-7
Max. 80Kg

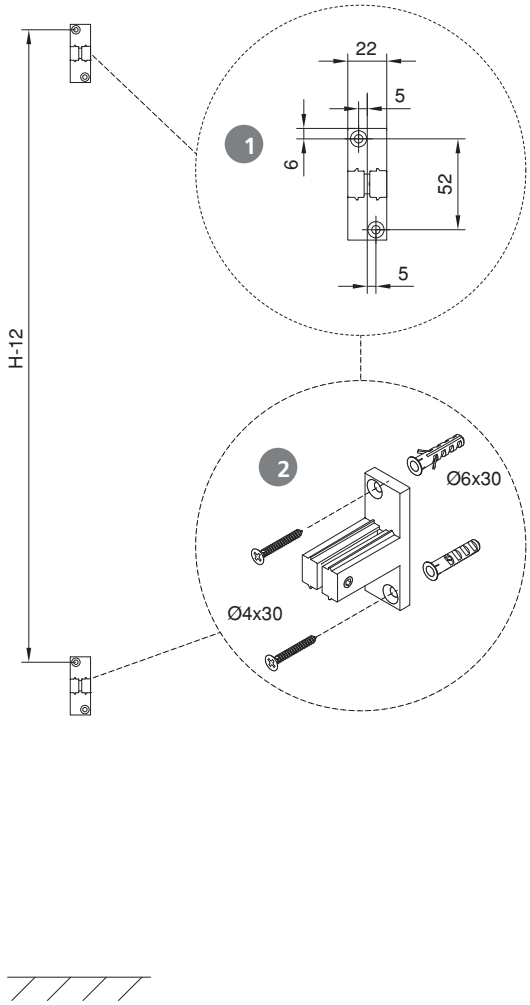
H-12
1
22
5
6
52
5
2
Ø6x30
Ø4x30
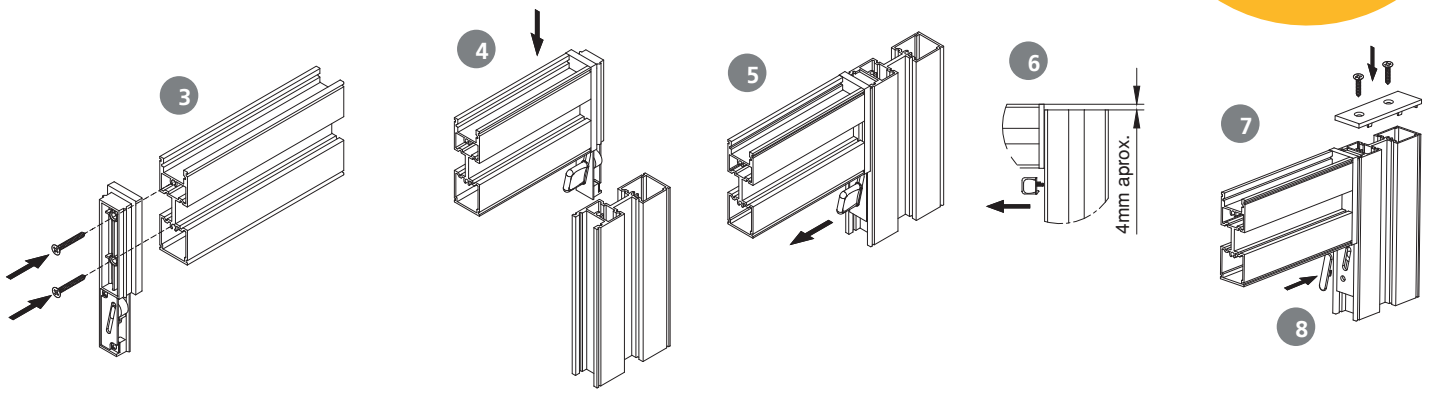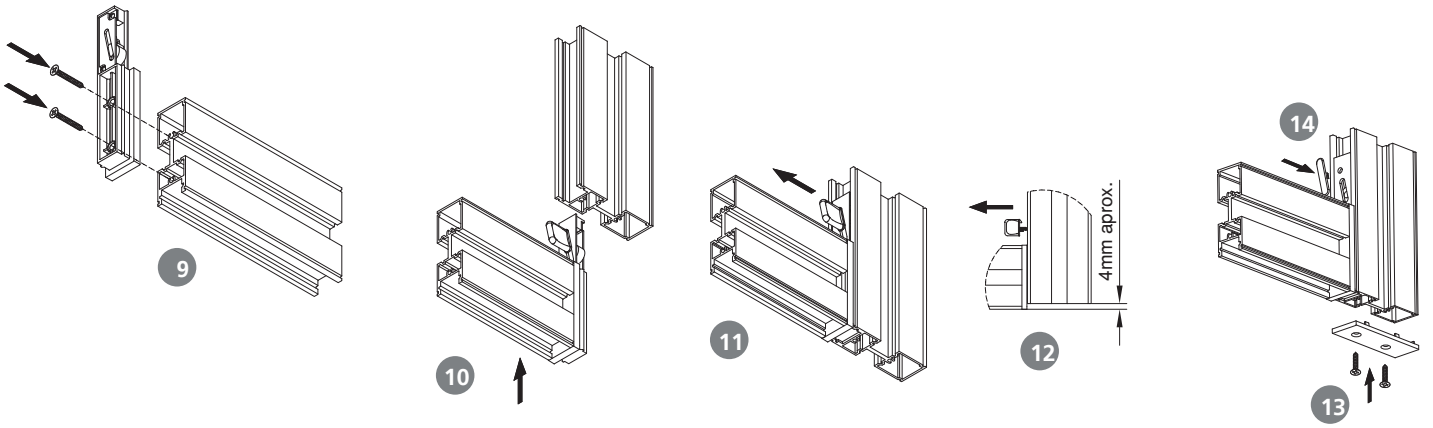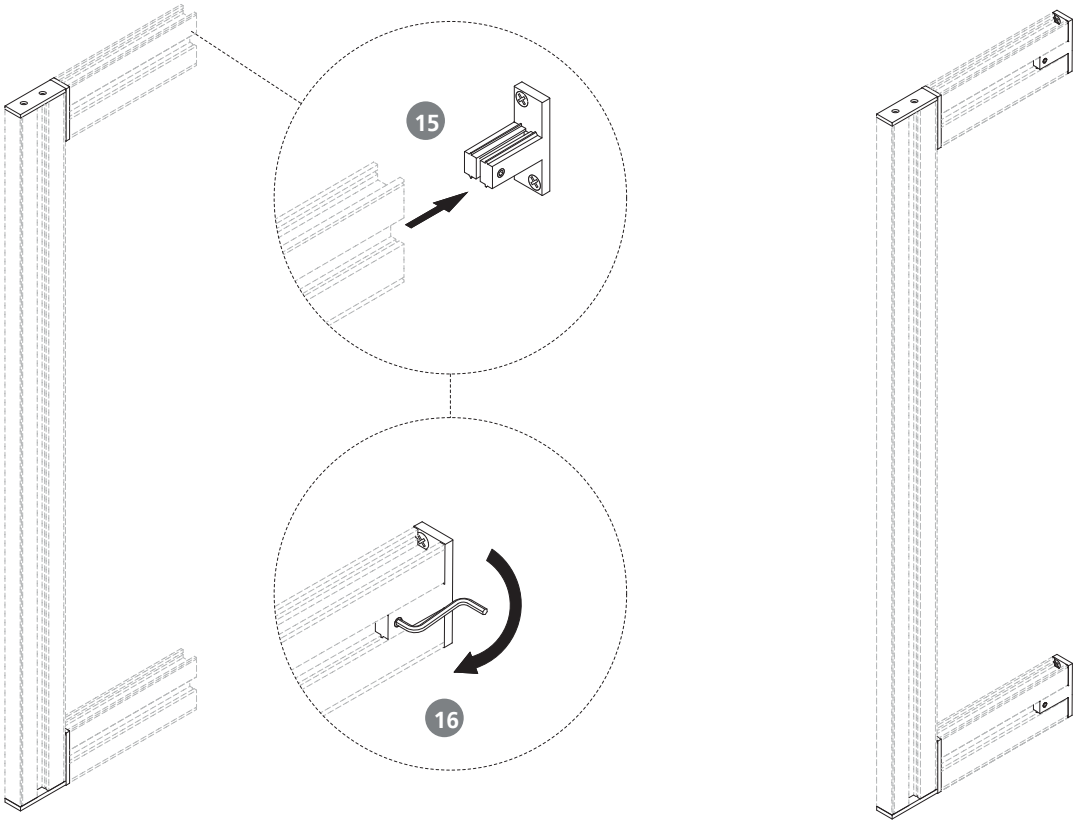
emuca
where creation begins