emuca
where creation begins

COPETE
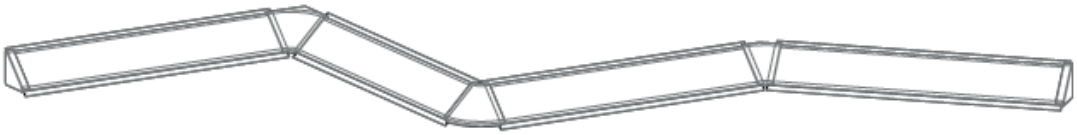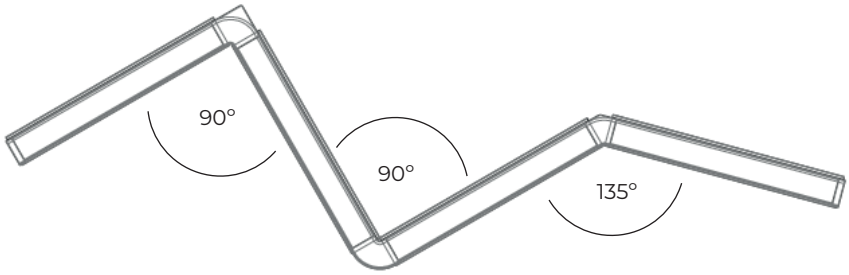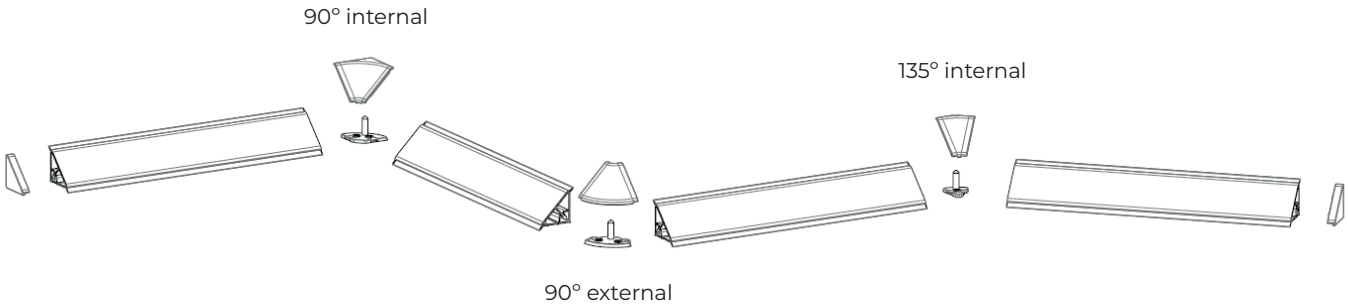
Triangular small backsplash